BÖWE PASSAT

Installation Instructions

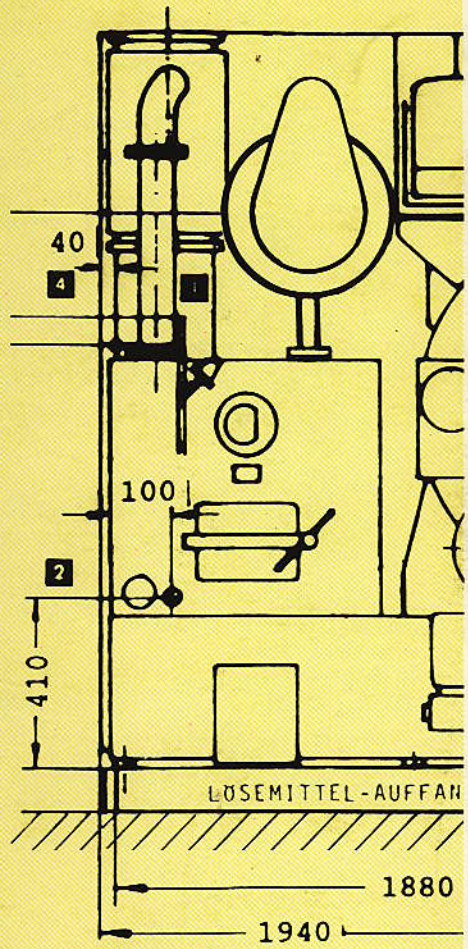

P 540

THE FIFTH GENERATION

IA..P 540 - 250/0590/E

Dear customer,

It gives us great pleasure to supply you with your 5th generation BÖWE machines. In designing and building it we have attached great importance to quality. It is up to the latest level of research and technology, particularly concerning environmental protection.

Please do not put this operating manual aside unread!

This manual contains important information on operational details of your drycleaning machine.

If specified measurements and installation information are disregarded, we cannot meet the warranty obligations contained in our General Terms of Delivery.

Measurements and other values are as at printing date.

We reserve the right to make technical changes without prior notice in the interest of further development or required constructional modifications.

BÖWE-PASSAT
REINIGUNGS- UND WÄSCHEREITECHNIK GMBH
Haunstetter Str. 112, P.O. Box 101360
D-8900 Augsburg Tel. 821/57020
West-Germany

BÖWE P 540

Contents

BÖWE P 540

Page

1. General information

Technical literature

We recommend to read the publications and technical literature by trade associations and research institutes.

Laws and regulations

All regulations concerning the industry, particularly concerning the proper handling of halogen hydrocarbons, must be complied with to avoid health risks and environmental damage.

Applicable laws and regulations in individual countries must - be complied with.

Applicable for the Federal Republic of Germany and West Berlin are:
Accident prevention rules/dry cleaning (VBG 66);
2nd Federal Emission Protection Law (2.BImSchV)
Water resources law (WHG § 19)
Waste disposal law Technical regulations for dangerous materials (RLGA 900)
Max. workroom concentrations (MAK-Values)
Instruction leaflets by the solvent and cleaning aid industry
VDI guidelinesn
DIN Standards
VDE regulations

Control aperture in accordance with the regulation on restriction of emission from halogen hydrocarbons 2nd BImSchV § 7.

The control aperture for measuring the mass concentration of volatile halogen hydrocarbons is part of the standard equipment of this dry cleaning machine. The aperture is a threaded hole which is closed by a yellow plug.

Test according to 2nd BImSchV

- Measuring time at end of cycle at sounding of hooter (signal)
- Insert measuring tube or measuring probe approx.50 mm deep

Do not switch off machine automatic before measuring has been completed.

Safety

Safety devices may not be by-passed, switched off or otherwise be rendered inoperative.
Please observe industrial safety regulations when installing the machine.

2. BÖWE P 540 Machine rear

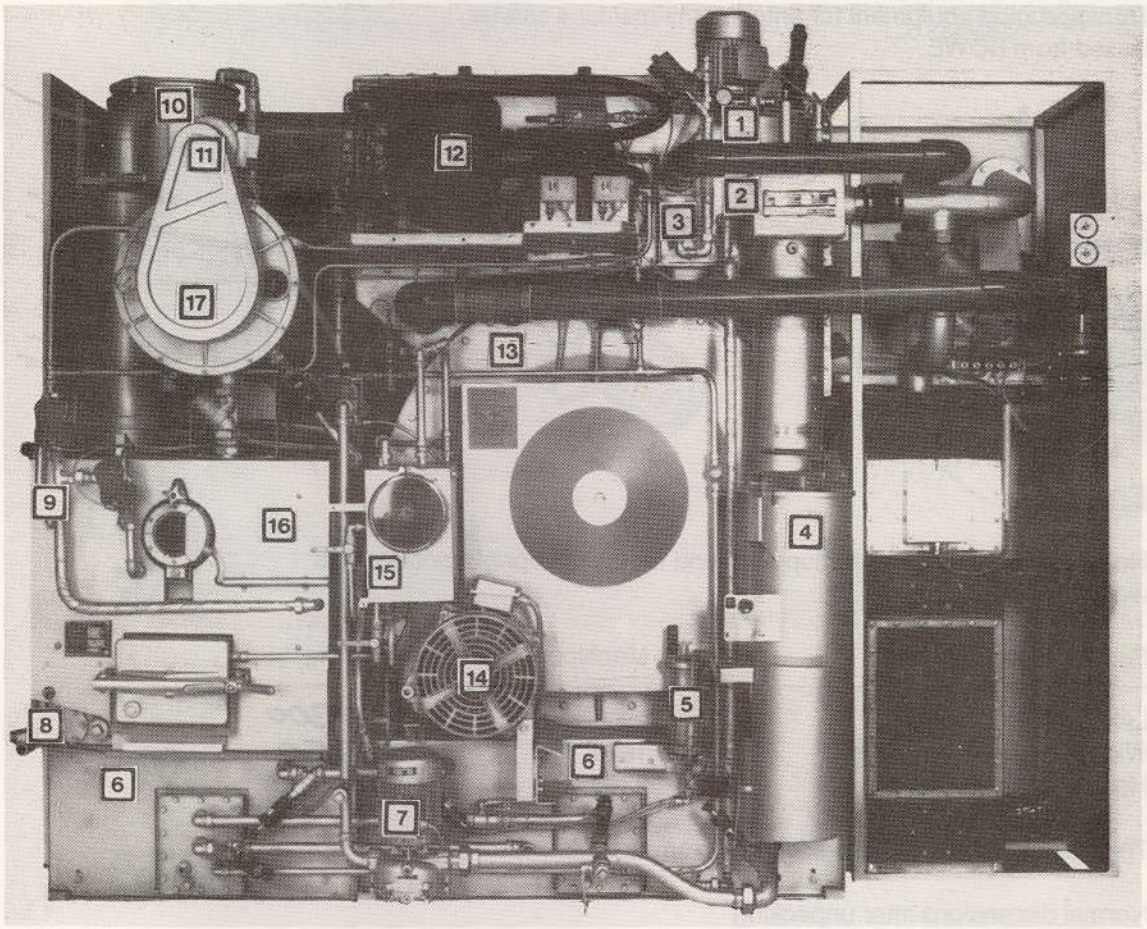

1	Fan	9	Anti-foam agent dosing pump
2	Recovery section	10	Condenser
3	Air heater	11	Filter drive
4	Lint filter/button trap	12	Refrigeration unit
5	Dosing unit	13	Cage housing with cage
6	Tank (2x)	14	Cage drive
7	Pump	15	Water separator
8	Still heating	16	Still
		17	Filter

3. Transportation

For proper transportation, installation and connection it is recommended to consult the appropriate experts.

For unloading transportation, machine entry and installation it is necessary to use suitable tools and devices such as a crane, forklift, elevating truck, bottle lift, ropes, winch, crowbars, rollers, wooden blocks, wedges.

Transportation equipment for entering the machine can be leased from BÖWE.

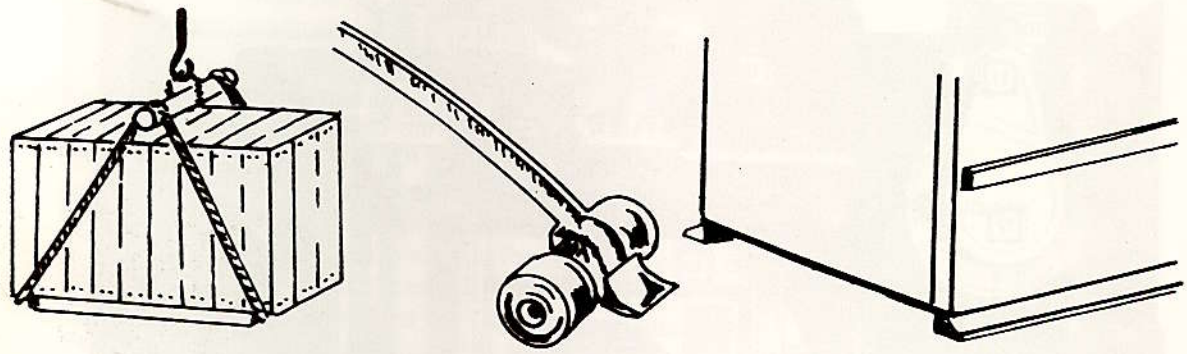

3.1 Entry

Normally the machine is transported and entered in upright position in a wooden crate or box.

Packing dimensions		Machine	Consorba
Length	mm	2300	1300
Width	mm	1620	750
Height	mm	2380	2180

There are alternatives if the entry is too small:

Normal dimensions after unpacking

Width	mm	1385	705
Height	mm	2340	2130

After 1 hour of diassembly work (fan, loading door)

Width	mm	1075
Height	mm	2165

After 6 hours of disassembly work (pump, filter, button trap)

Width	mm	1000
Height	mm	2165

4. Foundation

4.1 Foundation measurements

Caution: Both surfaces must be level for Consorba installation!

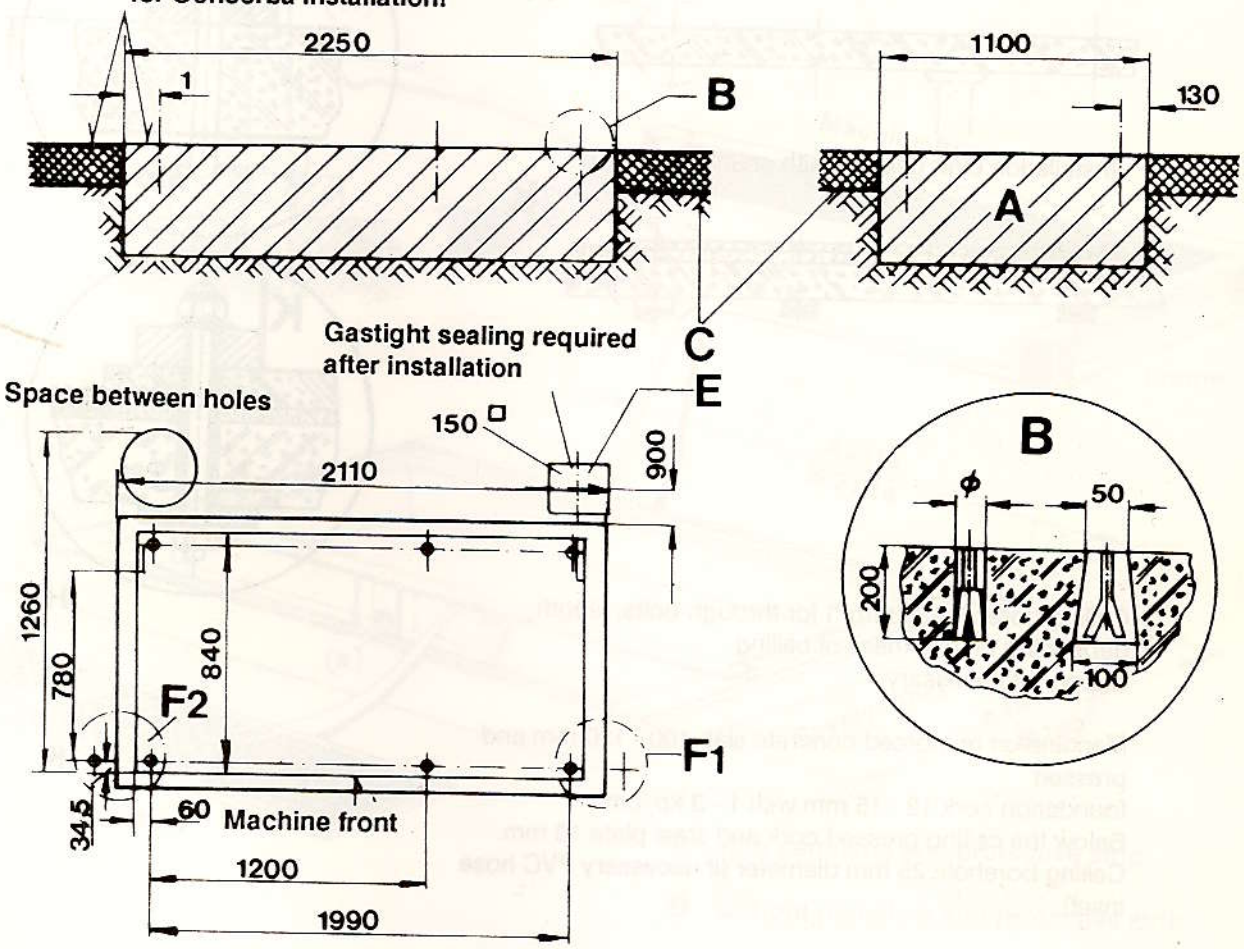

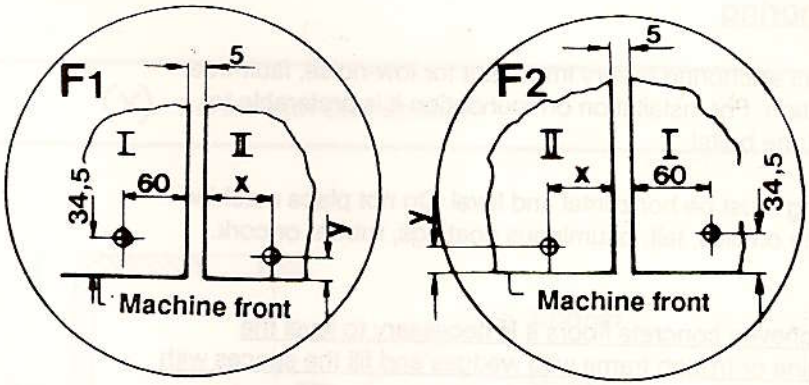

Reinforced concrete: for normal floors at least 300 mm deep	A
Hole for stone bolt or expanding anchor depending on make	B
Room floor - concrete slab	C
(If necessary) ceiling breakthrough for supply lines	E
Distance from P 520 to nearest machine (outside edge of machine panelling)	F

4. Foundation

4.1 Foundation measurements

Installation over ceilings

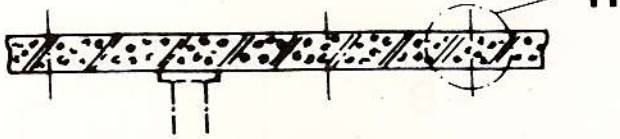

Installation over ceilings with sound insulation

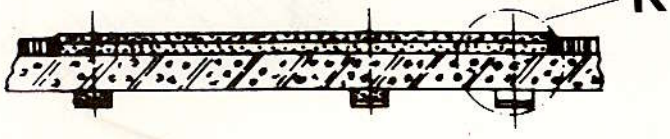

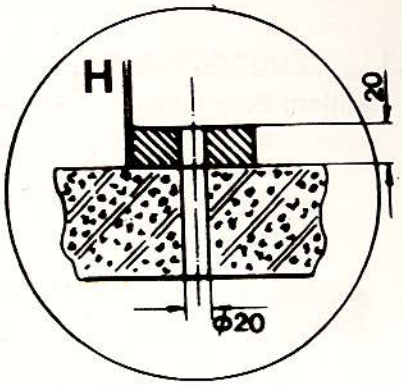

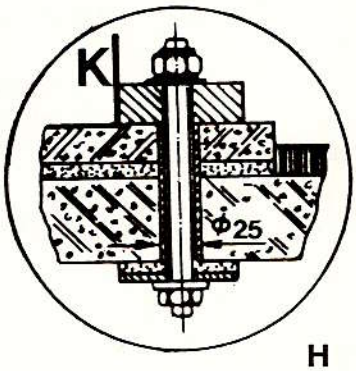

Ceiling borehole 20 mm °) for through-bolts, length depending on thickness of ceiling.
Support if necessary. **H**

Machine on reinforced concrete slab 100 - 120 mm and pressed
foundation cork 12 - 15 mm with 1 - 3 kp/cm2.
Below the ceiling pressed cork and steel plate 10 mm.
Ceiling borehole 25 mm diameter (if necessary PVC hose inset). **K**

4.2 Anchoring

Correct anchoring is very important for low-noise, fault-free operation. For installation on foundation it is preferable to use stone bolts!

Seating must be horizontal and level. Do not place machine directly on tiles, felt, bituminous coatings, rubber or cork.

With uneven concrete floors it is necessary to level the machine or trough frame with wedges and fill the spaces with cement.

4.3 Noise or vibration insulation

For special vibration insulation special foundations, dampers etc. can be used in collaboration with building and insulation specialists.

5. Solvent safety trough

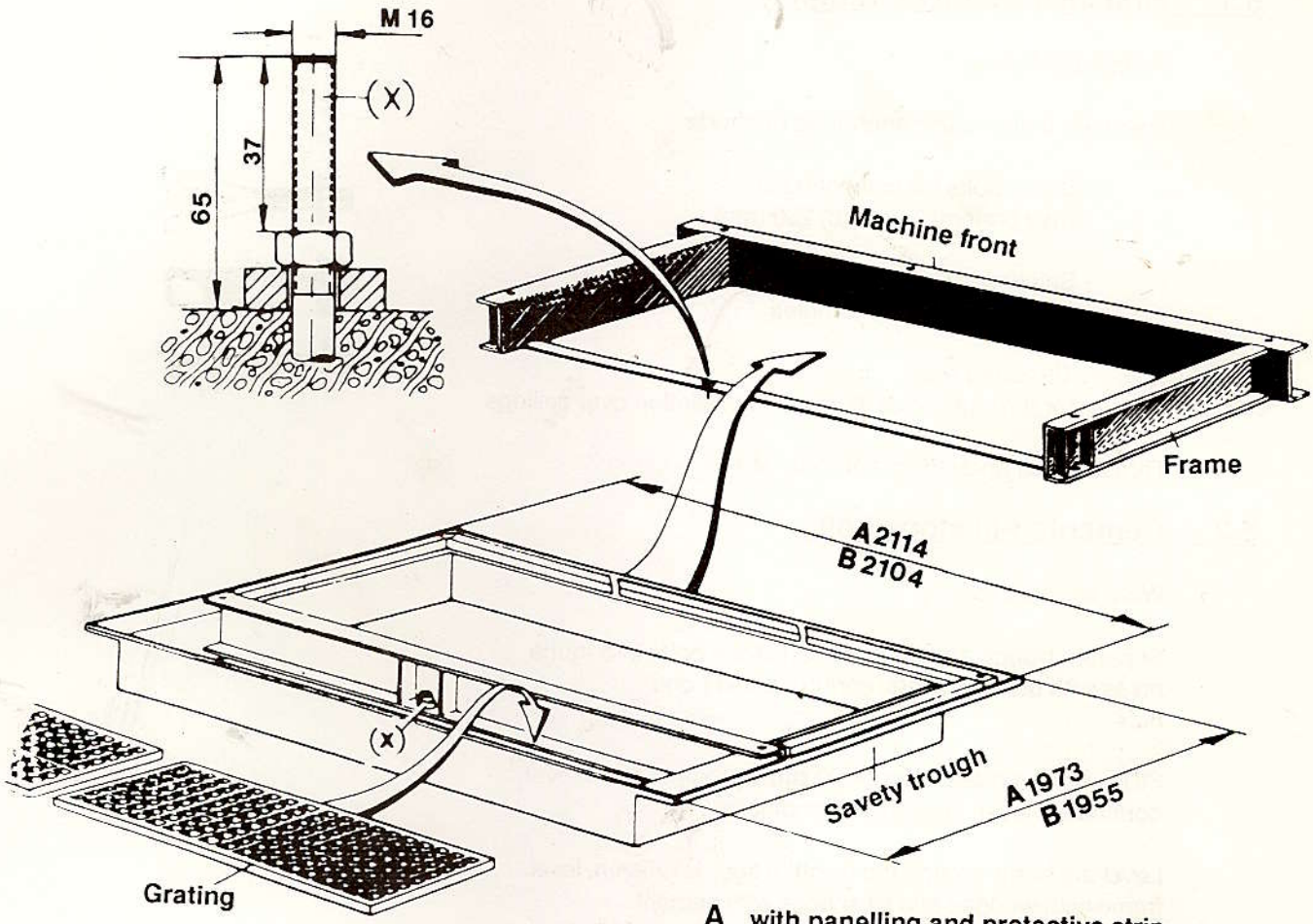

A with panelling and protective strip

B without panelling and protective strip

(X) Screw with seal bonnet

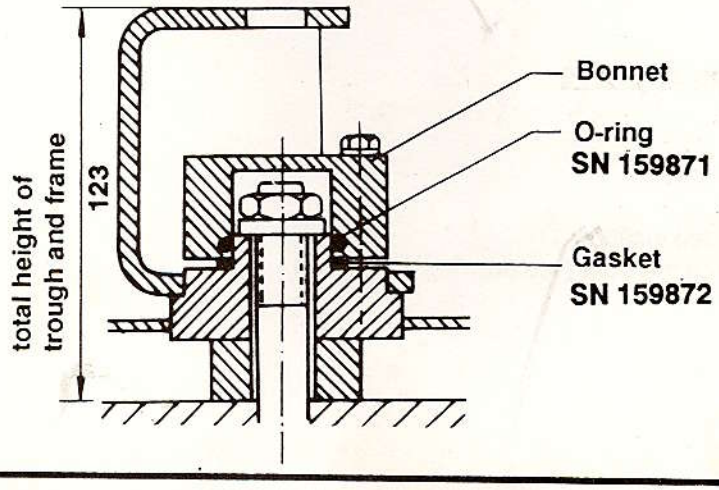

5 Solvent safety trough

5.1 First installation of trough

Trough anchoring:

There are 3 alternative anchoring methods:

- Stone bolts for cementing in
  (use preferably; length 250 mm)

- Safety expanding anchors
  for inserting in bored holes

- Threaded rods
  for through-holes in case of installation over ceilings

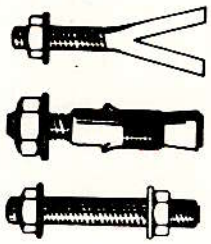

Thread for all anchoring methods: M 16

5.2 Cemented-in stone bolts

Work sequences:

Separate trough and frame, insert stone bolts into frame holes with plain washers, spring washers and nuts.

Stone bolt with seal bonnet (X) must project 65 mm over concrete (please see page 9 for details).

Level the frame (watch the front). If floor is uneven, level frame with wedges and fill spaces with cement.

Fill anchoring holes with quick-taking cement.

After cementation tighten nuts evenly. Remove stone bolt nut (X).

Unscrew brass seal bonnet from trough, do not damage the gasket.

Put trough into frame.

Tighten nut and washer of the stone bolt (X).

5.3 Safety expanding anchors

Work sequences:

Separate frame from trough.

Install frame at intended location.
Caution: Please watch the front (see drawing on page 8).

5. Solvent safety trough

Use frame as drilling template.

Pilot-drill with rock drill 16 mm.
Minimum drilling depth 130 mm.
Remove frame.
Using the template drill 130 mm deep with 25 mm rock drill.

Remove nuts and washers of expanding anchors.
Put anchors into drilled holes.
Caution: Long expanding anchor into bore (X) screw with seal bonnet.

Put the frame on and level. If floor is uneven, level with wedges and fill spaces with cement.

Tighten anchor nuts evenly.
Put trough into frame.

Tighten nut and washer of screw with seal bonnet. (X)

Caution: In tightened condition the threaded bolt may not project more than a maximum of 5 mm over the nut (grind off if longer).

Safety expanding anchors can be obtained from BÖWE.

Safety expanding anchor (component) SN 155919, consisting of:

1 long SN 149466
5 short SN 149469

5.4 Threaded rods (bored-through ceiling)

Work sequences:

Separate frame from trough.

Install frame in intended location.

Caution: Please watch front (see drawing on page 9).

Use frame as drilling template.

Pilot-drill with rock drill 16 mm.

Remove frame.

In case of normal installation over a ceiling drill 20 mm deep with rock drill (see foundation drawing).

In case of vibration-insulated installation over a ceiling (see foundation drawing) drill 25 mm deep with rock drill.

5. Solvent safety trough

The frame must be completely level on the floor.
If not, level with wedges and fill spaces with cement.

With both floor installations (normal and vibration-insulated), the screw with seal bonnet (X) must freely project 65 mm.

6. Installation

6.1 Surrounding conditions

6.1.1 Regulations

Applicable regulations for room ventilation and size, odour and noise emissions, accident prevention etc. must be met. The control box contains contacts to control the room air (see page 22)

Noise level at a distance of 2 meters:

without Consorba	67 dB (A)
with Consorba	69 dB (A)

6.1.2 Temperature

Machine should not be exposed to direct sunlight. Adequate air supply is to be ensured due to heat exchange (heat build-up!) Room temperature should not drop below 1 °C owing to the risk of water in the system freezing, and not exceed 40 °C in continuous operation owing to increased solvent consumption.

Heat radiation:

without Consorba	15,000kJ
with Consorba	15,300kJ

6.1.3 Structural surroundings

Partitions, screens, intermediate ceilings and similar near the machine are to be fitted in such a way that they do not hinder operation and are easily and quickly removed for maintenance and repair.

NOTE!

Do not operate appliances with open flames, e.g. gas-fired flatwork ironers, tumblers, in the same room, because they can be damaged by noxious, corrosive gases in the event of solvent decomposition.

Please ensure that no air from the machine can escape into a possibly existing heating plant room.

6. Installation

6.2 Place of installation

6.2.1 Required space

Front and rear of the machine should be accessible for operation, maintenance and repair.

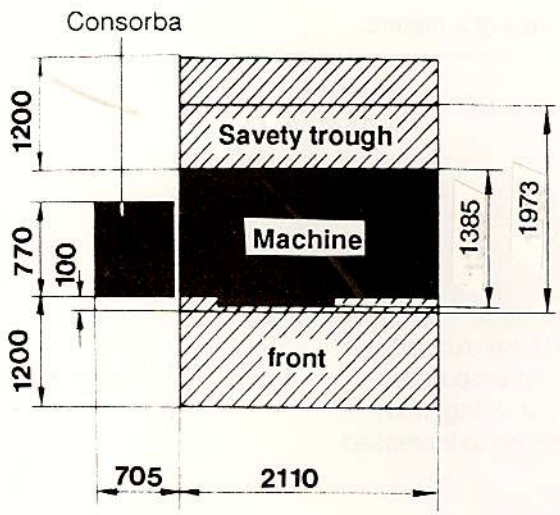

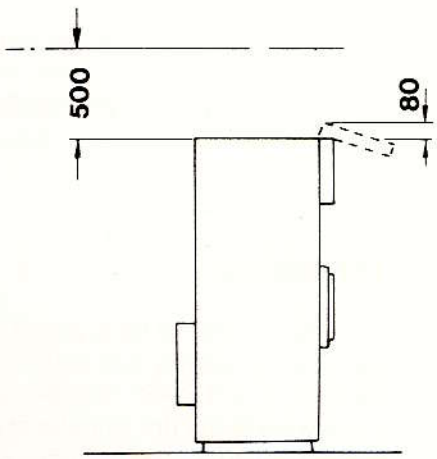

6.2.2 Machine dimensions

		without Consorba	with Consorba
Length	mm	2,110	2,815
Width	mm	1,385	1,385
Height	mm	2,340	2,340

6.2.3 Floor load

The place of installation must conform to the floor load which is composed of:

- static load = machine weight + max. solvent filling and
- dynamic load = centrifugal cage force with normally distributed, extraction-damp garments.

The force created during extraction must also be taken into account (floor, supporting walls etc.). Resonances are not permissible.

Please consult building specialists.

6. Installation

6.3 Floor load data

6.3.1 Dimensions

		without Consorba
Length	mm	2,110
Width	mm	1,385
Floor surface	m2	1.8
Weight without solvent	kg	1,400
Weight with solvent (stat. load)	kg	2,015
Centrifugal cage force (dyn. load)	N	8,742
Floor load (stat. + dyn. load)		
- Standard drive	N/m2	15,813

Regarding the foundation work please consult building experts. They will take machine-related as well as local particulars into account and find the best solution.

Please use a load distributor if the permissible floor load is inadequate. We also recommend to install a solvent safety trough (a must in Germany). Please see page 8.

6.3.2 Anchoring methods

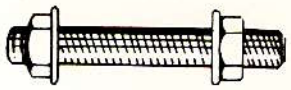

- For installation over ceilings
  Through-bolts (threaded rod)
  with washers and nuts M 16
- For installation on foundation
  Stone bolts for cementing in recessed
  or opened holes.

or

Heavy-load plugs with threaded rod

or

Safety exapnding anchors for inserting
in bored holes.

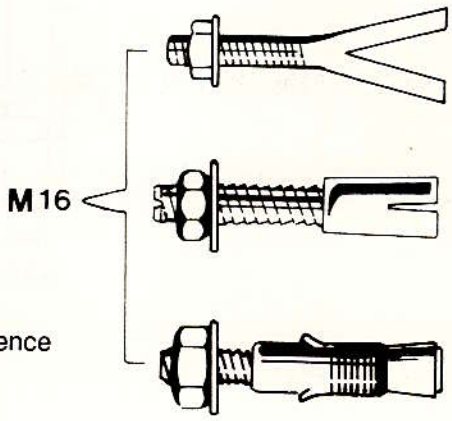

We will not be liable for any damage caused by disregard for our recommendations and information.

NOTE:
The Consorba does not need a foundation and has no influence on the machine foundation.

6.4 Machine installation

Work sequences:
Using rollers and other tools bring machine 10 mm over the trough. It is preferable to push the machine onto the trough from the narrow side. If the machine has to be pushed on from the front, BÖWE supports SN 139516 are available. For mounting instructions please see the label on the supports. Screw machine to frame by means of hexagon screws M 16 (included in delivery).
Retighten foundation screw nut with seal bonnet (X).
Put on copper gasket according to drawing.
Screw on seal bonnet and tighten.
Insert gratings.

7. Connection

7.1 Machine dimensions specification

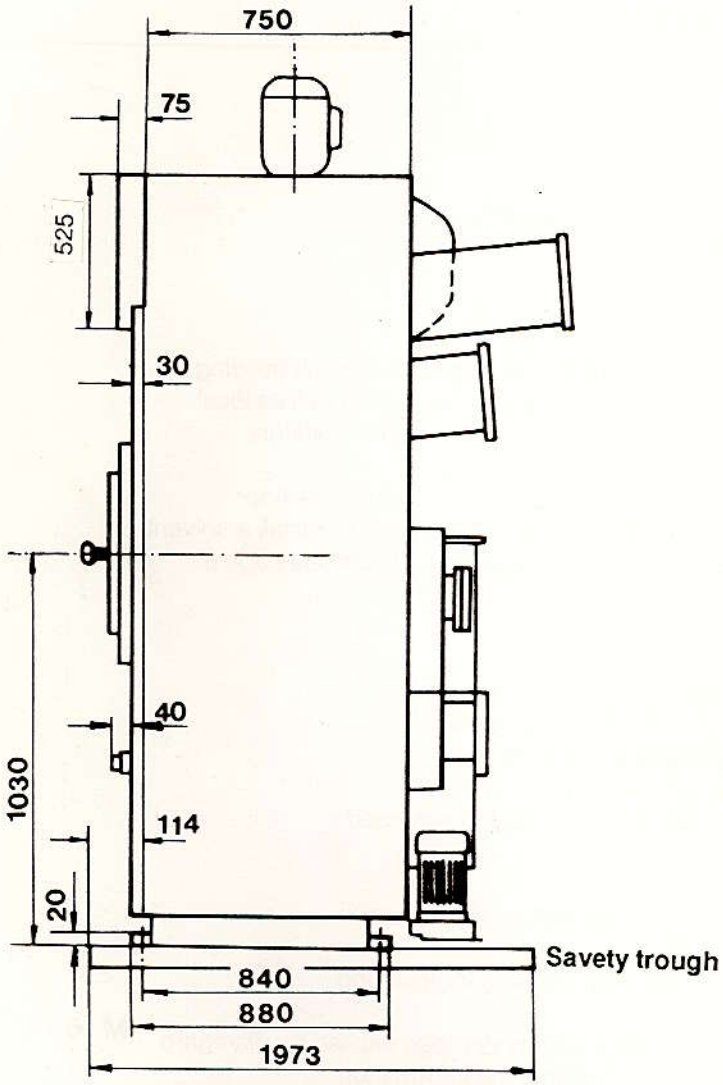

with panelling and protective strip

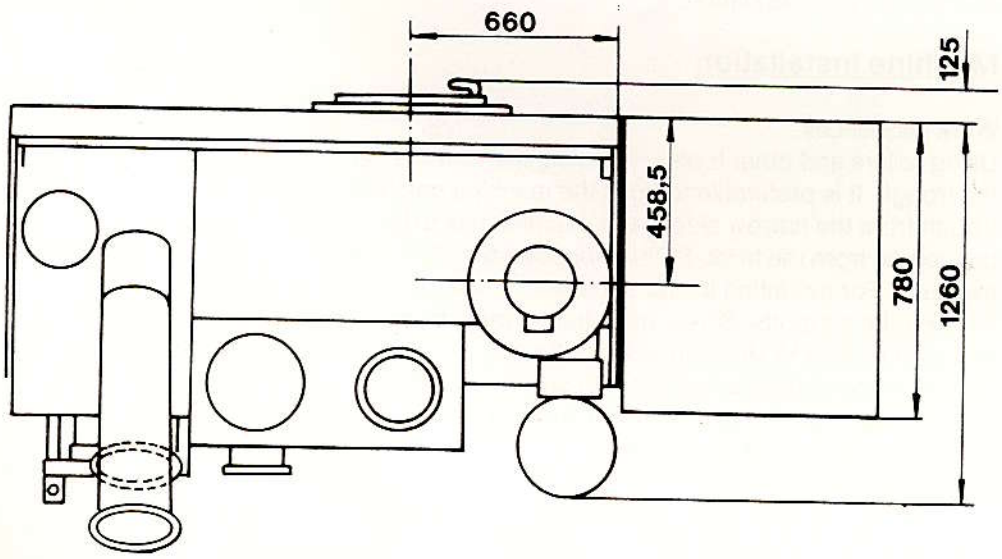

7. Connection

7.2 Machine connections specification

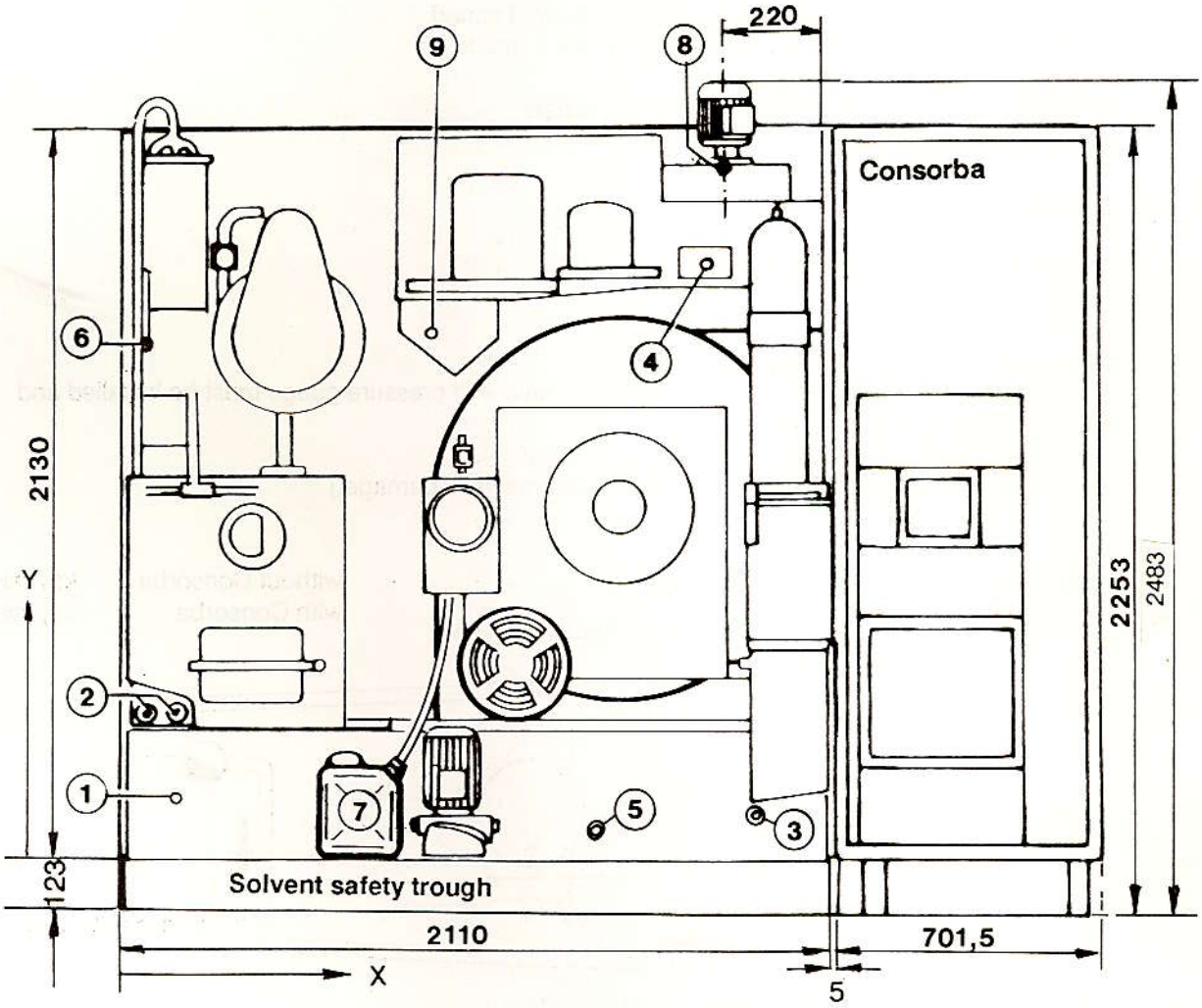

We reserve the right to change measurements!

Pos.	Medium	NW mm	Zoll inch	- X - mm	- Y - mm
1	Steam/Still	15	1/2	130	190
2	Condensate/still	15	1/2	50	430
3	Steam/heater	15	1/2	1,830	90
4	Condensate/heater	15	1/2	1,660	1,720
5	Cooling water inlet	15	1/2	1,390	100
6	Cooling water drain	20	3/4	40	1,170
7	Processing water collecting container				
8	Compressed air	8	1/4	1,910	2,060
9	Elec. connection			865	1,625

7. Connection

7.3 Piping

Connect the supply and drain pipes (supplied by customer) in accordance with the installation details. Steam, compressed air and water must receive stop valves. Water connection must be according to DIN 1988. To avoid sound conduction through solids, an intermediate piece - made of

flexible metal hose - can be connected and the pipe supports insulated.

7.3.1 Steam

Installaton and connection should be insulated
Avoid the use of asbestos!

Operating pressure 4 - 5 bar saturated steam
At a pre-pressure of more than 5 bar a reducing valve with pressure gauge must be installed and set so that the admissible max
Perc temperature of 150 °C (please measure!) is not exceeded. (Danger of solvent decomposition and machine damage!)

Steam requirement (steam generator size)

without Consorba	kg/min 1.2
with Consorba	kg/min 1.45

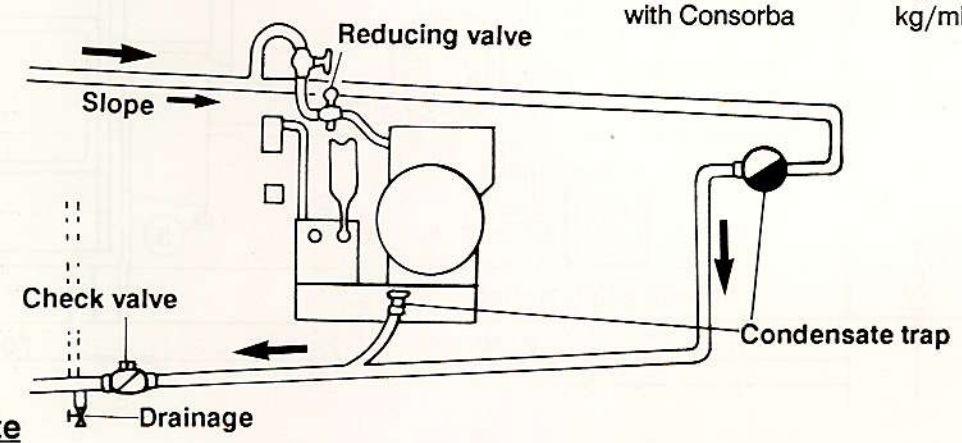

7.3.2 Condensate

Install insulated condensation line with a slope, away from machine.
In case of an ascending slope check valve and drainage must be at the lowest point.

Important: Condensate counter-pressure must be at least 1.5 bar below the steam inlet pressure.

7.3.3 Cooling water supply

Fit the line to the machine without reduction of cross section and if possible without bends. The heat balance of the machine is optimally set to 12 °C cooling water inlet temperature and a uniform pressure of 2 - 4 bar.

7. Connection

For safety reasons a water flowback stop and venting device should be installed.

With a pressure drop in the cooling water supply or higher cooling water temperatures (e.g. re-chilling operation), the supply line must be at least one nominal size larger. Inlet temperatures should not exceed 22 °C as otherwise stains would be caused on the garments, solvent consumption would increase and the drying time would be longer. Water pressure must be adapted to the higher inlet temperature up to double the max. requirement.

With re-chilling the correct installation is especially important. Among other things, the following must be taken into account: cooler performance, switch-over to public city water supply, low temperature storage, pump size, cooling water valve by-pass.

Cooling water peak demand 4 bar (12 °C)

without Consorba	l/min	15.0
with Consorba	l/min	17.0

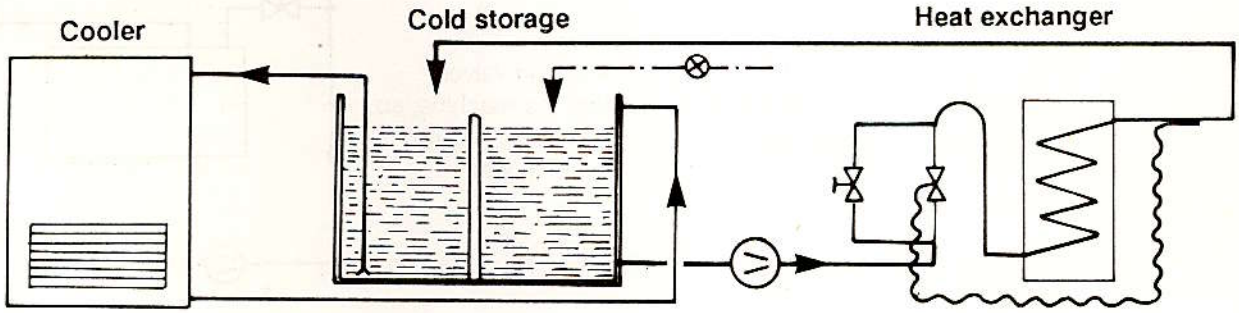

Data for temperatures up to 22 °C:

Min. nominal width	NW	25 / 1"
Pump throughput	m3/h	0.6
Pump pressure	bar	4 - 6
Heat to be eliminated:		
without Consorba	kJ/h	47,000
with Consorba	kJ/h	51,500

See also the special installation and instruction manual for the re-chiller.

7. Connection

Installation examples for cooling water supply

Connection for city water supply

Cooling water drains must be separate.

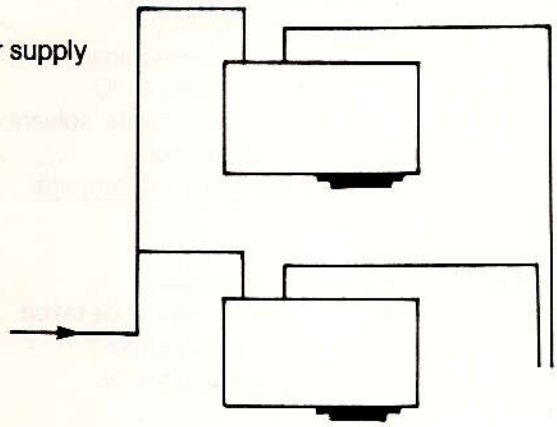

Connection with water recirculation (refrigeration unit or cooling tower)

When supply and drain lines are fitted with hand valves, both valves must be opened before starting the machine, so that cooling is ensured and the sensor in the condensate drain line of the still responds in case of cooling water shortage.

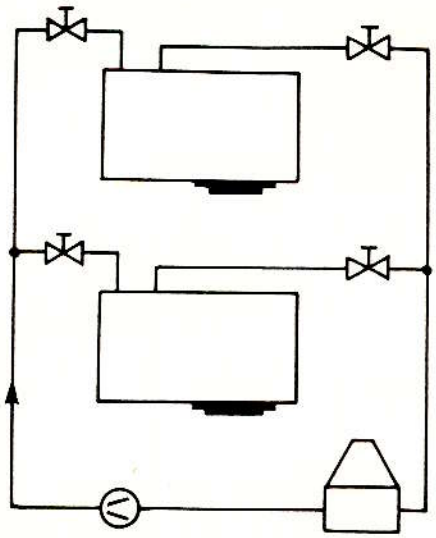

7.3.4 Cooling water drain

Cooling water leaving the machine can be passed to the drains, re-used or re-chilled as it flows in closed circuit within the machine and has no contact with solvent.

Cooling water re-use is preferable.

7. Connection

7.3.5 Processing water

The processing water collecting container must be drained every day. Purify by means of processing water purification. system.

7.3.6 Compressed air

Air pressure should be at least 6.0 bar. The machine is equipped with a compressed air reducing valve, pressure gauge and compressed air water separator.

7.3.7 Electric connection

Note mains voltage (data-plate). Make connections L1/L2/ L3, establish neutral and protective conductor with corresponding cross-section and fusing. Pass cable through existing PG union into the control box and connect at terminal.

P 540 without Consorba		P 540 da	P 540 el WRF	P 540 el
	Operating load kW	7.75	21.75	23.75
230 V	Nominal currentA	41.4	47.3	51.6
	Fuse A	50	50	50
400 V	Nominal current A	25.7	46.97	50.0
	Fuse A	35	50	50
415 V	Nominal current A	28.4	44.97	47.6
	Fuse A	35	50	50

P 540 with Consorba		P 540 da	P 540 el WRF	P 540 el
	Operating load kW	8.85	27.9	27.9
230 V	Nominal current A	46.1	62.7	67.0
	Fuse A	50	63	80
400 V	Nominal current A	27.3	61.8	61.8
	Fuse A	35	63	63
415 V	Nominal current A	27.3	57.9	57.9
	Fuse A	35	63	63

*Electrically heated Consorba 6.1 kW

WRF = Heat recovery

7. Connection

7.3.8 Actuation of room ventilation

Regulations permit to couple the machine's automatic controls to a room ventilation fan. The machine cannot be started before room ventilation has been switched on.

Room air intake inlet 71 (in 71)
x7/8b
x7/8z

The contacts are connected with the fan controls.

Room ventilation fan

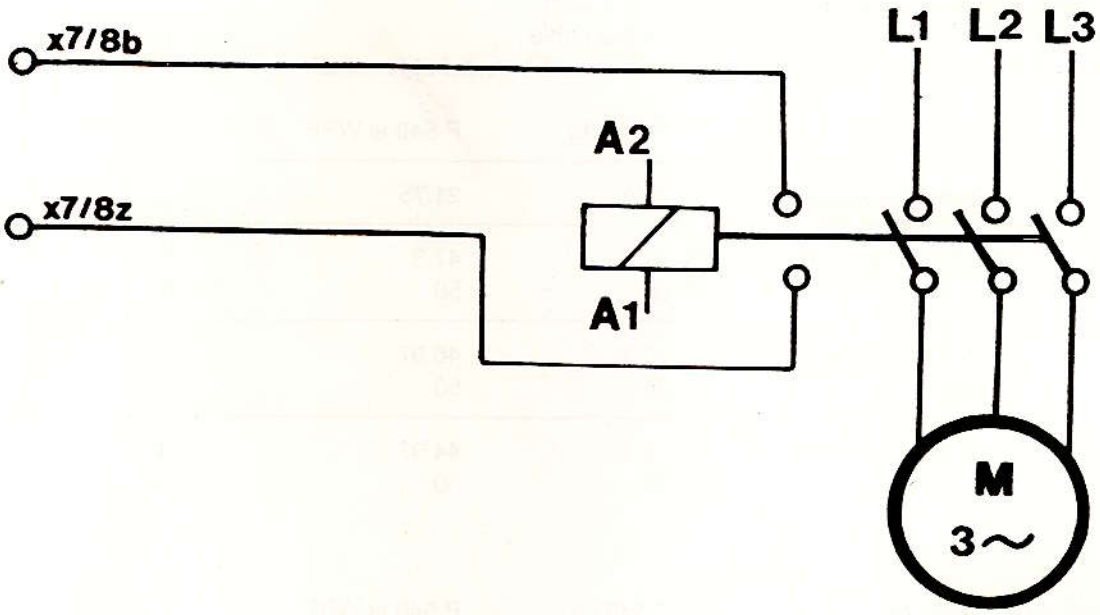

8. Technical Data

Machine with Consorba

Machine			P 540	P 540
Heating			da	el
Loading capacity		kg	20	20
Cage volume		l	400	400
Cage diameter		mm	970	970
Cage depth		mm	540	540
Cleaning speed		1/min	36	36
Extraction speed		1/min	360	360
Low level (nN)		l	50	50
High level		l	100	100
Consumption per load: Standard 2-bath, 1st. bath (nN) to still				
Elec. energy/drying		kWh	3.5	4.7
Elec. energy/distillation		kWh	--	6.9
Saturated steam/drying		kg	4.0	--
Saturated steam/still		kg	11.0	--
Cooling water/drying		l	80	80
Cooling water/distill.		l	150	150
Compressed air (6.5 bar)		l	7.0	7.0
Heat balance: Standard 2-bath, 1st bath (nN) to still				
Heat eliminated by cooling water		kJ/h	49,900	51,500
Radiation to ambient		kJ/h	15,300	15,300
Max. distillation rate (DIN 11915)		l/h	200	150
Filtration rate (RA at 1 bar)		l/h	7,500	7,500
Max. saturated steam requirement (5 bar)		kg/min	1.45	--
Steam supply line/condensate		NW	15/15	--
Max. cooling water requirement		l/min	17.0	17.0
Cooling water supply/drain		NW	15/20	15/20
Compressed air connection		NW	8	8
Still capacity		kW	--	8+8
After-heater capacity		kW	--	6.0
Condenser capacity		kW	5.5	5.5
Fan capacity		kW	0.25/1.50	0.25/1.5
Pump capacity		kW	1.1	1.1
Cage drive capacity		kW	0.75/3.0	0.75/3.0
Filter drive capacity		kW	1.0	1.0
Consorba fan capacity		kW	1.1	1.1
Consorba heating		kW	--	5.0
Max. operating load		kW	8.85	27.9
Weight without solvent		kg	1,655	1,655
Weight with solvent		kg	2,015	2,015
Cage vibration force		N	8,742	8,742
Floor space		m2	2.35	2.35
Floor load stat. a. dyn.		N/m2	15,813	15,813
Floor load caused by machine only.				
Machine dimension	Length	mm	2,815	2,815
	Width	mm	1,385	1,385
	Height	mm	2,340	2,340
Volume: filling/total:				
Tank I		l	160/175	160/175
Tank II		l	220/240	220/240
Still		l	235/309	235/309
Filter RA		l	75	75

Subject to changes !

8. Technical Data

Machine without Consorba

Machine		P 540	P 540
Heating		da	el
Loading capacity	kg	20	20
Cage volume	l	400	400
Cage diameter	mm	970	970
Cage depth	mm	540	540
Cleaning speed	1/min	36	36
Extraction speed	1/min	360	360
Low level (nN)	l	50	50
High level	l	100	100
Consumption per load: Standard 2-bath, 1st. bath (nN) to still			
Elec. energy/drying	kWh	2.2	3.5
Elec. energy/distillation	kWh	--	6.9
Saturated steam/drying	kg	2.6	--
Saturated steam/still	kg	11.0	--
Cooling water/drying	l	60	60
Cooling water/distill.	l	150	160
Compressed air (6.5 bar)	l	7.0	7.0
Heat balance: Standard 2-bath, 1st bath (nN) to still			
Heat eliminated by cooling water	kJ/h	47,000	49,500
Radiation to ambient	kJ/h	15,000	15,000
Max. distillation rate (DIN 11915)	l/h	200	150
Filtration rate (RA at 1 bar)	l/h	7,500	7,500
Max. saturated steam requirement (5 bar)	kg/min	1.2	--
Steam supply line/condensate	NW	15/15	--
Max. cooling water requirement	l/min	15.0	15.0
Cooling water supply/drain	NW	15/20	15/20
Compressed air connection	NW	8	8
Still capacity	kW	--	8+8
After-heater capacity	kW	--	6.0
Condenser capacity	kW	5.5	5.5
Fan capacity	kW	0.25/1.50	0.25/1.5
Pump capacity	kW	1.1	1.1
Cage drive capacity	kW	0.75/3.0	0.75/3.0
Filter drive capacity	kW	1.0	1.0
Max. operating load	kW	7.75	23.75
Weight without solvent	kg	1,400	1,400
Weight with solvent	kg	2,015	2,015
Cage vibration force	N	8,742	8,742
Floor space	m2	1.8	1.8
Floor load stat. a. dyn.	N/m2	15,813	15,813
Floor load caused by machine only.			
Machine dimension Length	mm	2,110	2,110
Width	mm	1,385	1,385
Height	mm	2,340	2,340
Volume: filling/total:			
Tank I	l	160/175	160/175
Tank II	l	220/240	220/240
Still	l	235/309	235/309
Filter RA	l	75	75

Subject to changes !

9. Setting and optimum operating values

Steam pressure (saturated steam)	bar	4-5
Steam temperature (max. permissible)	°C	150
Cooling water pressure	bar	2-4
Max. cooling water temp.	°C	25
Compressed air	bar	6
Overpressure safety valve	bar	0.3
Loading door pressure switch	mmWS	70
Reversing cycle	sec	11-4-11
Low level	l	50
High level	l	100
Pump pressure (max.)	bar	2.6
Filling capacity refrig. agent R 502	kg	3.,5
Expansion valve Danfoss TEY2	°C	10 bis -40
Nozzle size	Nr.	3
close to right	turns	4.5
Cooling water regulator setting	bar	18
with Consorba	bar	18
Working pressure control switch ON	bar	5.3
Working pressure control switch OFF	bar	1.4
Safety pressure control switch OFF	bar	26
Safety pressure control switch ON	bar	22
Low temperature safety thermostat (query at cycle end)	°C	10
Approx. water filling quantity in heating chamber	l	3.5
Still thermostat OFF	°C	135
" (Still stripping) OFF	°C	145
Solvent condensate thermostat OFF	°C	65
Still pressure control switch (el only)		
ON	bar	5.2
OFF	bar	5.6
Thermostat I	°C	50
Thermostat II	°C	40
Condenser cooling water regulator	°C	45
Solvent condensate drain temperature	°C	35
Shutter in steam supply line	mm	5
Shutter in live steam line	mm	3
Precoat filter powder quantity	kg	2.4
Filter surface (RA)	qm	4.8

10. Consumption values

10.1 Material required for start-up

Before starting the machine the following initial filling quantity as well as a 2-week supply should be available.

PERC (DIN 53978) fresh from supplier	l	500
Filter powder (machine with RA filter)	kg	30

Cleaning aids and other products: According to supplier recommendations

10.2 Consumption values

	without Consorba	with Consorba
Solvent (of weight of garments) (loss)	max. 2%	max. 1%
Filter powder (of weight of garments) Machine with RA filter	0.6%	0.6%
Cleaning aid (depending on product and process)	1%	1%
Lubricating agent	1 kg/year	1 kg/year

Lubricants in smaller containers can be bought at gas stations or the mineral oil trade.

Lithium base grease:

ALVANIA 3	(SHELL)
BEACON 2	(ESSO)
MARSON L3	(FINA)
WÄLZEROL 4	(SKF)

Explanations:

da	=	steam-heated
el	=	electric heating
RA	=	Rotating precoat filter
WRF	=	Heat recovery
SN	=	BÖWE serial number (please indicate on order!)